PROBLEM 1: (40%)

The bar shown in the figure is pinned to the massless slider at point A. The motion of the slider is restrained through two springs of equal stiffness ($k = mg/l$). If the slider is pulled to the right a small distance and released from rest while the bar is in the vertical position. Answer the following:

1. Derive the nonlinear equations that govern the free vibrations of the system.
2. Linearize the equations for small angles of rotation.
3. Find the natural frequencies of the system and show how you obtain a transformation that decouples the system into its modal coordinates. Only show the steps, there is no need to calculate eigenvectors or a matrix inverse, etc.

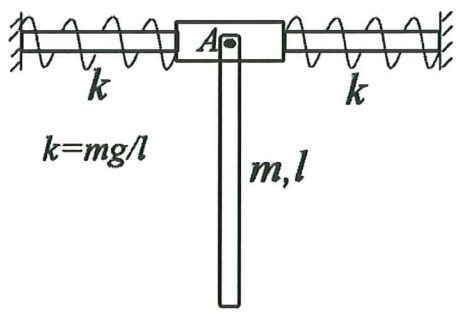

PROBLEM 2: (20%)

Packages having a mass m are delivered from a conveyer to a smooth ram with a velocity v_0 as shown in the figure. If the radius of the ramp is R, determine the angle θ at which the packages lose contact with the surface.

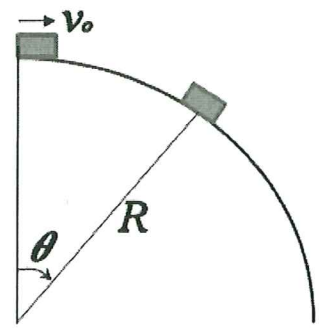

PROBLEM 3: (25%)

Two rotating rods are connected by a slider block at point P. The rod attached at point A rotates with a constant angular velocity $\omega_A = 8rad/s$. The distance between point A and B is $250mm$. For the data given and instant shown.

1. Find the magnitude and direction of the velocity and acceleration of point P.
2. Given the dimensions of the mechanism, are there any limits to its range of motion? Is there some critical value of the ratio of PB to AB beyond or below which the rod AD cannot go through 360 degrees?

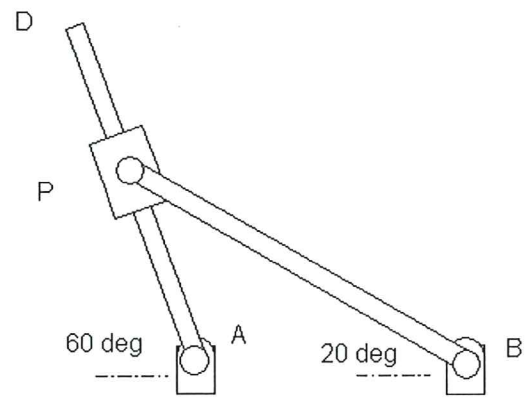

PROBLEM 4: (15%)

A person is holding a stone at shoulder height and walking forward at a brisk, constant pace. What kind of path will the stone follow if the person drops the stone, i.e., where will the stone land in relation to the person and in relation to the point of release?

Please state clearly any assumptions you make. Sketch the path and justify your answer using basic principles.